Clenergy
Innovating renewable energy

PV-ezRack PostMount 6-A with ECO Rail

Code-Compliant Planning and Installation Guide V2.0

Introduction

1. Introduction

Clenergy PV-ezRack PostMount 6-A is a ground mounting system suitable for large scale commercial and utility scale installations. PV-ezRack PostMount 6-A has been developed to fit any PV module in the outdoors and uneven ground areas. PV-ezRack PostMount 6-A have good compatibility for the different region via the angle adjustment (10°~60°). Using high quality engineered components PostMount 6-A saves developers and installers, time and money when delivering large scale projects.

Please review this manual thoroughly before installing PostMount 6-A. This manual provides the following contents:
(1) Installation planning;
(2) Installation instructions.

List of Contents

The PV-ezRack PostMount 6-A parts, when installed in accordance with this guide, will be structurally adequate and meet the GB50009-2012, JIS8955, EN 1990/1991/1993, ASCE7-10, ISO 14713 standard. During installation, and especially when working on the ground, please comply with the appropriate occupational health and safety regulations. Please also pay attention to other relevant regulations in your local region. Please check that you are using the latest version of the installation manual by contacting Clenergy via email on www.clenergy.com.cn.or contacting your local distributor.

The installer is solely responsible for:

- Complying with all applicable local or national building codes, including any updates that may supersede this manual;
- Ensuring that PV-ezRack and other products are appropriate for the particular installation and the installation environment;
- Using only PV-ezRack parts and installer supplied parts as specified by PV-ezRack project plan;
- Recycle: Recycling according to the local relative statute;
- Ensuring that there are no less than two professionals working on panel installation;
- Ensuring the installation of related electrical equipment is performed by licenced electricians;

Unit 1, 10 Duerdin St, Clayton VIC 3168, Australia
Tel: +61 3 9239 8088 Fax: +61 3 9239 8024
E-mail: tech@clenergy.com.au www.clenergy.com.au

Tools & Components

2. Tools & Components

2.1 Tools

Tools

Allen Key 6 mm

Spanner

Torque Wrench

5m Tape

2.2 Components

Components

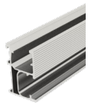

ER-R-ECO/3100
ECO Rail, length 3100mmx4

ER-RT-100/1900
PM6-A Rectangular Tube-Masterx1

ER-RT-70/2600
PM6-A&PM8-A Rectangular Tube-Landscapex3

ER-P-152/3000
Pipex1

ER-P-152/1500-F
Pipe with Flange Basex1

ER-SC-PM6/PM8
PM6-A, PM8-A Steel Cap Assemblyx1

ER-RT-100/576
PM6-A, PM8-A Adjustable Tubex1

ER-IC-ST
Inter Clamp Standardx8

ER-EC-ST
End ClampStandardx8

Unit 1, 10 Duerdin St, Clayton VIC 3168, Australia
Tel: +61 3 9239 8088 Fax: +61 3 9239 8024
E-mail: tech@clenergy.com.au www.clenergy.com.au

3. System Overview

3.1 Overview of PV-ezRack PostMount 6-A

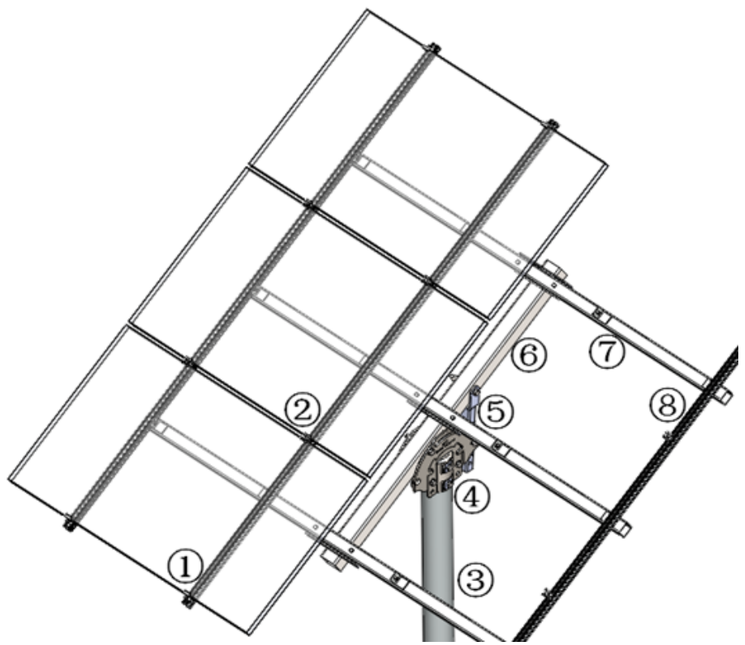

① End Clamp Standard
② Inter Clamp Standard
③ PM6-A Pole
④ Steel Cap Assembly
⑤ Adjustable Tube
⑥ Rectangular Tube-Master
⑦ Rectangular Tube-Landscape
⑧ ECO Rail

Side view drawing of PV-ezRack PostMount 6-A is shown below. The panels tilt angle and embedment depth below are for reference only.

Unit 1, 10 Duerdin St, Clayton VIC 3168, Australia
Tel: +61 3 9239 8088 Fax: +61 3 9239 8024
E-mail: tech@clenergy.com.au www.clenergy.com.au

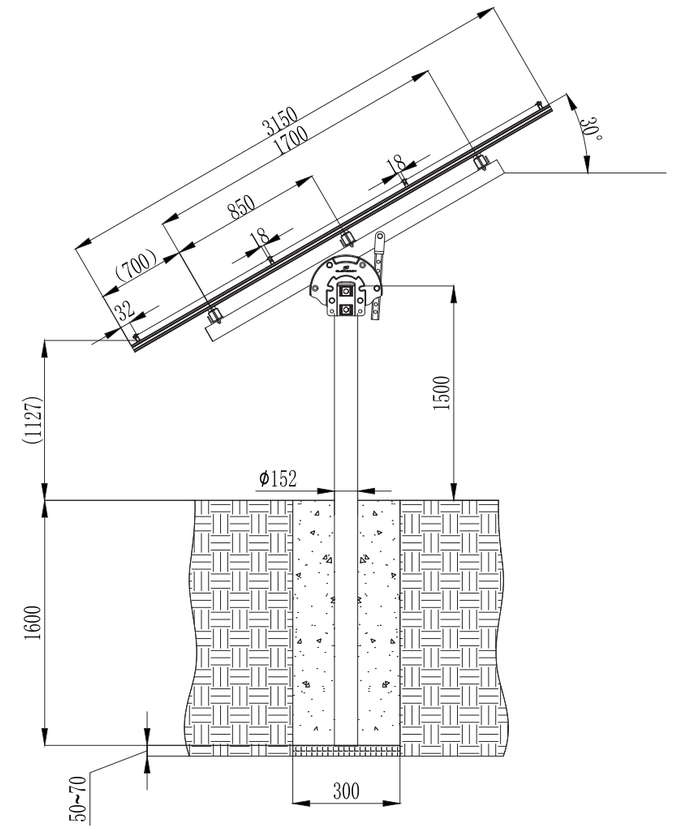

3.2 Precautionary Measures for Stainless-Steel Fastener Installation

Improper operation may lead to the deadlock of bolts and nuts. Follow the steps below to reduce this risk.

3.2.1 Reduce the friction coefficient

(1) Ensure that the thread surface is clean (no dirt or contaminant).
(2) Apply lubricant (grease or 40# engine oil) to fasteners prior to tightening to avoid galling or seizing in the threads.

Unit 1, 10 Duerdin St, Clayton VIC 3168, Australia
Tel: +61 3 9239 8088 Fax: +61 3 9239 8024
E-mail: tech@clenergy.com.au www.clenergy.com.au

3.2.2 General installation instructions

(1) Apply force to fasteners in the direction of thread.
(2) Apply force uniformly to maintain required torque.
(3) Professional tools and tool belts are recommended.
(4) Avoid using electric tools for final tightening.
(5) Avoid working at high temperatures.

3.2.3 Safe Torques

Please refer to safe torques defined in this guide as shown in the figure below. If power tools are required, Clenergy recommends the use of low speed only. High speed and impact drivers increase the risk of bolt galling (deadlock). If deadlock occurs and you need to cut fasteners, please make sure that there is no load on the fastener before you cut it. Avoid damaging the anodized or galvanized surfaces.

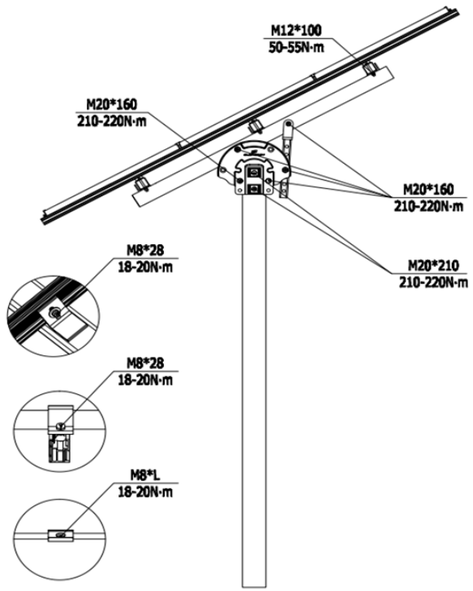

3.3 Installation Dimensions

All drawings and dimensions in this installation guide are for generic reference. The PV-ezRack PostMount 6-A is to be optimized to suit specific conditions for each project and documented in engineering drawings. As a result, major components of the PV-ezRack PostMount 6-A may be provided in sectional sizes and lengths that vary from those shown in this guide. The installation operations detailed in this instruction guide remain the same regardless of the component size. In case you need to do any on-site modifications or alteration of the system in a way that would be different from engineering drawings, please provide marked up drawings/sketches for Clenergy's review prior to modification for comment and approval.

Unit 1, 10 Duerdin St, Clayton VIC 3168, Australia
Tel: +61 3 9239 8088 Fax: +61 3 9239 8024
E-mail: tech@clenergy.com.au www.clenergy.com.au

4. Installation Instruction

4.1 Pipe Installation

Solution 1: Pole Pre-buried
Dig a hole with the diameter of 300mm.

Place the pole into the middle of the hole and fill it with concrete (min 25 MPa strength). Maintain the position of the post. The allowed vertical tolerance is ±2°.Keep the axle of the 2- Ø22 holes parallel to East-West;keep the vertical angle deviation within ±5°.For more than one system on one site maintain all the axles of 2- Ø22 holes aligned.

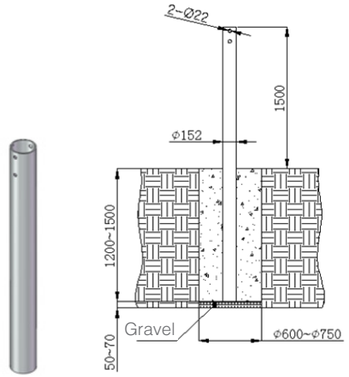

Solution 2: Flange Based Pole

Secure the Flange based Pole to the concrete foundation with M20 foundation bolts. Axis of 2-Ø 22 hole is parallel to west, angle tolerance is within±5°, and 2- Ø 22 holes direction of all poles is consistent.

Recommended torque for M22 bolts is 215~220 N·m

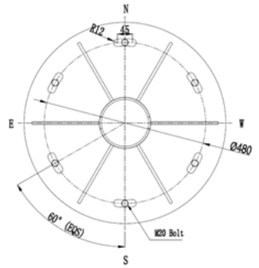

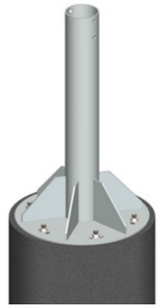

4.2 Steel Cap Installation

Connect the Pipe to the corrugated washer and Steel Cap Assembly with M20*210 hexagonal bolt, spring washer 20, M20 nut .
Combine two Steel Caps with M20*160 hexagonal bolt, spring washer 20, M20 hex nut.

Note:
1. Do not fasten the Bolt prior to complete the assembly of PM6-A Rectangular Tube-Master.
2. Keep all the Bolt head aligned.

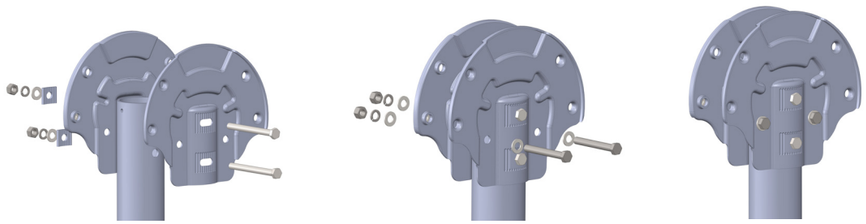

Unit 1, 10 Duerdin St, Clayton VIC 3168, Australia
Tel: +61 3 9239 8088 Fax: +61 3 9239 8024
E-mail: tech@clenergy.com.au www.clenergy.com.au

4.3 PM6-A Rectangular Tube-Master Installation

4.3.1 Fix the Rectangular Tube-Master at Steel Cap Assembly with M20*160 hex bolt, M20 nut, plain washer 20, and spring washer 20. See the mark ① .

4.3.2 Fix the Adjustable Tube at Rectangular Tube-Master with M20*160 hex bolt, plain washer 20, and spring washer 20, M20 nut. See the mark ② .

4.3.3 Fix the Adjustable Tube at Steel Cap Assembly with M20*160 hex bolt, M20 nut, plain washer 20, and spring washer 20. See the mark ③ .

Realized the angle adjustment by position the bolt in the differrent holes.

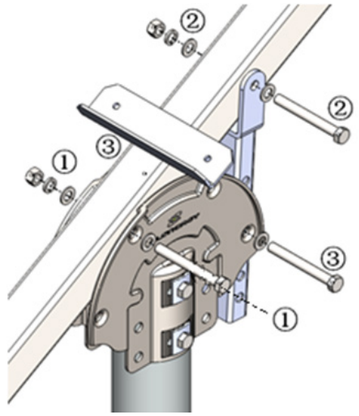

4.3.4 Fasten the Steel Cap Assembly to Pipe with M20*210, M20*160 Hex Bolt, keep the Rectangular Tube-Master parallel to the south-north by adjust the Steel Cap Assembly.

Recommended torque for M20 bolts is 210~220 N·m.

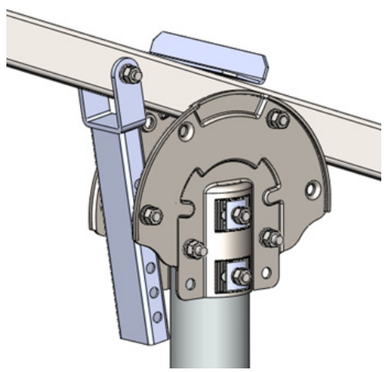

Note:
1: Adjust the angle of the allation, the angle of the Rectangular Tube-Master with 10°(6 holes from up to bottom corresponds to 10° to 60° tilt angle) in order to make the assembly process run smooth.
2: Using the adjustable washer to avoid the gap between the Rectangular Tube-Master and the PM6/8-A Adjustable Tube. Unreliable connection is forbidden.

Unit 1, 10 Duerdin St, Clayton VIC 3168, Australia
Tel: +61 3 9239 8088 Fax: +61 3 9239 8024
E-mail: tech@clenergy.com.au www.clenergy.com.au

4.4 Rectangular Tube- Landscape Installation

4.4.1 Fix the 3 pcs PM6-A Rectangular Tube- Landscapes at Rectangular Tube-Master with 2 pcs M12*100 hex bolts， 2 pcs M12 nuts , 2 pcs plain washers 12 and 2 pcs spring washers 12. Do not fasten the Nut until 3 Rectangular Tube- Landscapes aligned.

Note: Adjust the Rectangular Tube- Landscapes until the dimension D1=D2=D3=D4.

Recommended torque for M12 bolts is 50~55 N·m.

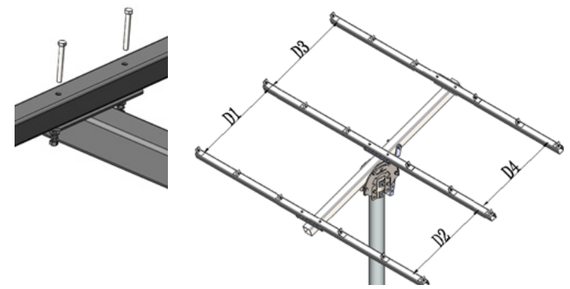

4.5 ECO Rail Installation

Fix the ECO Rail to Rectangular Tube-Master with M8*20 hex socket bolt, Z module, Spring washer 8, Washer 8.

Note: Make sure that the rail ends align horizontally and that the rails are parallel to each other.

Recommended torque for M8 bolts is 18~20 N·m.

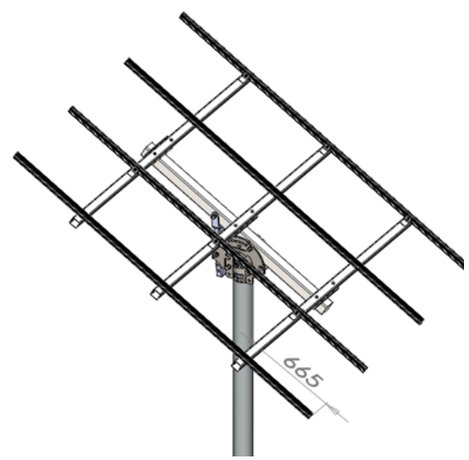

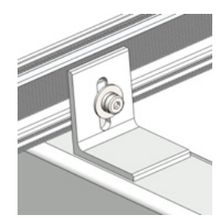

Unit 1, 10 Duerdin St, Clayton VIC 3168, Australia
Tel: +61 3 9239 8088 Fax: +61 3 9239 8024
E-mail: tech@clenergy.com.au www.clenergy.com.au

Installation Instruction

Clenergy
Innovating renewable energy

4.6 PV Module Installation

4.6.1 Fix the PV panel to Rail, via Inter Clamps and End Clamps step by step until all the panels complete.

Recommended torque for M8 bolts is 18~20 N·m

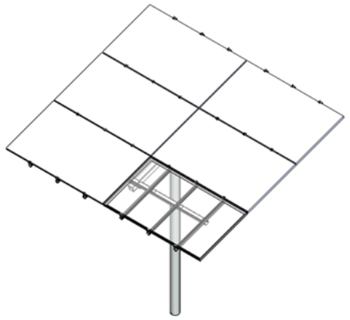

End Clamp

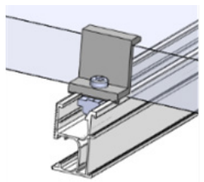

Inter Clamp

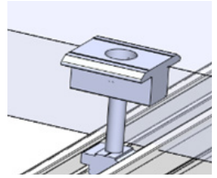

Unit 1, 10 Duerdin St, Clayton VIC 3168, Australia
Tel: +61 3 9239 8088 Fax: +61 3 9239 8024
E-mail: tech@clenergy.com.au www.clenergy.com.au

Clenergy Australia
1/10 Duerdin Street, Clayton VIC 3168 Australia
Tel: +61 3 9239 8088 Fax: +61 3 9239 8024
E-mail: sales@clenergy.com.au
www.clenergy.com.au

Clenergy China
999-1009 Min'an Rd, Huoju Hi-tech Ind. Dev. Zone
Xiang'an District 361101, Xiamen, Fujian, China
Tel: +86 592 311 0088 Fax: +86 592 599 5028
E-mail: sales@clenergy.com.cn
www.clenergy.com.cn

Clenergy EMEA
Esplanade 41, 20354 Hamburg, Germany
Tel: +49 (0) 40 3562 389 00
E-mail: sales.emea@clenergy.com

Clenergy Japan
Nittochi Yamashita Building 5th Floor
23 Yamashita-cho, Yokohama, 231-0023 Japan
Tel: +81 45 228 8226 Fax: +81 45 228 8316
E-mail: sales@clenergy.co.jp
www.clenergy.jp

Clenergy Philippines
145 Yakal St., San Antonio village, Makati City, Philippines
Tel: +63 977 8407240
E-mail: sales_ph@clenergy.com
www.clenergy.ph

Clenergy Thailand
9/2, 5th Floor, Vorasin Building, Soi Yasoob 2, Viphavadee-Rungsit Road, Chomphon Sub-district, Chatuchak District, Bangkok 10900
Tel: +66 (0) 2 277 5201, +66 (0) 6 3228-0200
E-mail: sales_th@clenergy.com, support_th@clenergy.com
www.clenergythailand.com

Clenergy Singapore
24 Raffles Place #28-01 Clifford Centre Singapore 048621
Tel: +65 9743 1425
E-mail: vincent.chan@clenergy.com

Clenergy Malaysia
Tel: +86 18750231005
E-mail: sales_em@clenergy.com

Clenergy Vietnam
Tel: +86 592 3110095
E-mail: sales_vietnam@clenergy.com;
susie.chen@clenergy.com

Worldwide Network